SwRI®
SOUTHWEST RESEARCH INSTITUTE

D-EGR

33% D-EGR® for Hybrid Applications

Meeting China Phase 5 Fuel Consumption Standards

China's proposed Phase 5 fuel consumption standards may require <4 L/100 km fuel economy by 2025. Internal combustion engine (ICE) technologies alone will be unlikely to meet the new standards; however, hybridized powertrains can meet these standards. As the ICE engine evolves to meet challenging new standards there will be an optimization of most light-duty ICE applications. These will be known as dedicated hybrid engines (DHE). The marriage of DHEs and hybrid systems further reduces fuel consumption.

One technology that can increase ICE efficiency is exhaust gas recirculation (EGR). In 2005, Southwest Research Institute® (SwRI®) pioneered an advanced EGR concept, globally recognized as Dedicated Exhaust Gas Recirculation (D-EGR®). In the future there will be a strong synergy between D-EGR and DHE concepts where further fuel economy benefits can be realized.

Southwest Research Institute D-EGR demonstration vehicle

Client Benefits

- SwRI's new three-cylinder D-EGR concept will provide 33% full-time high-quality EGR. As part of a DHE platform the engine compression ratio can be increased, while vehicle transient requirements can be assisted by electric machines.
- D-EGR can help Chinese OEMs meet future fuel economy and pollutant emissions standards.
- D-EGR can beat lean-burn fuel efficiency while retaining a low-cost stoichiometric aftertreatment solution.

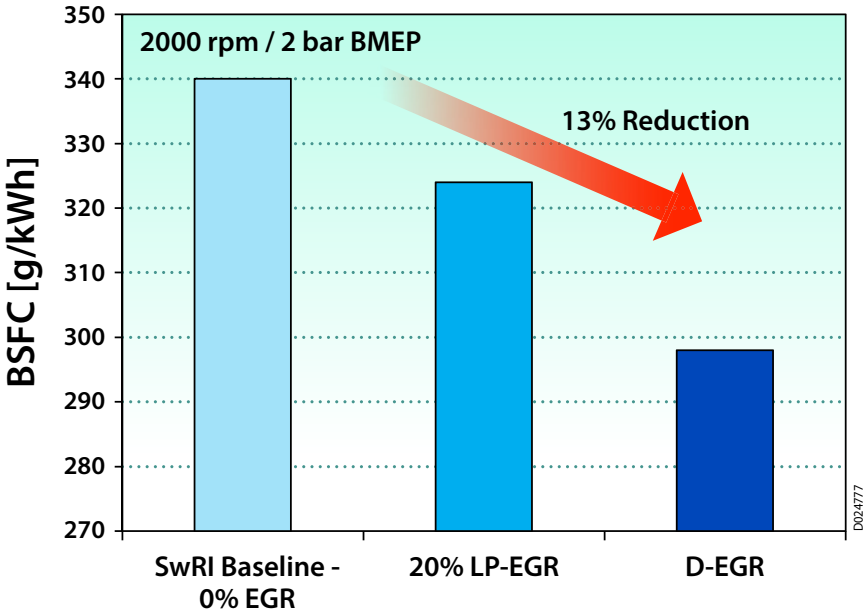

Part-load fuel economy benefit of D-EGR

SwRI Capabilities & Experience

- SwRI staff members are recognized globally as the leading consultant experts in D-EGR combustion.
- SwRI holds 39 D-EGR patents and has published over 60 peer-reviewed papers on D-EGR.
- SwRI produced a demonstration vehicle utilizing the D-EGR concept which was able to meet or exceed emissions standards while also realizing a fuel economy benefit of over 10%.
- SwRI has developed advanced nondestructive scanning techniques to apply D-EGR to any ICE platform, including those with integrated exhaust manifolds.
- SwRI has extensive facilities to assist with simulation, design, development, testing, and certification of any D-EGR concept.

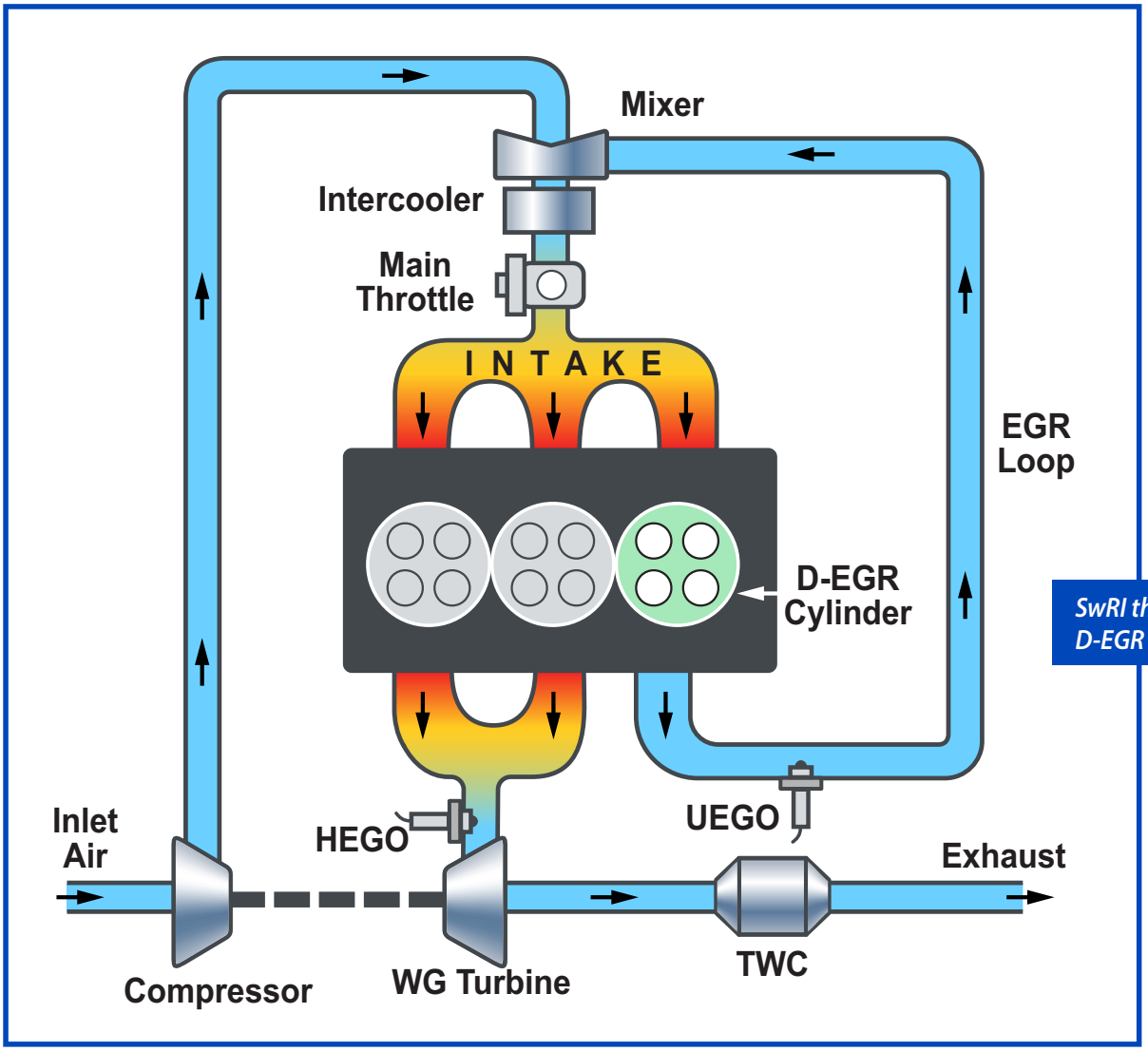

SwRI three-cylinder D-EGR concept

We welcome your inquiries.
For additional information, please contact:

Graham Conway, PhD
Spark-Ignition Engine R&D
210.522.5134
gconway@swri.org

swri.org

Automotive Propulsion Systems Department
Powertrain Engineering Division

powertrain.swri.org

Designed & printed by SwRI MPS 03-0321 JCN 265124 bl